Classic w/ EcoSlim Installation Instructions

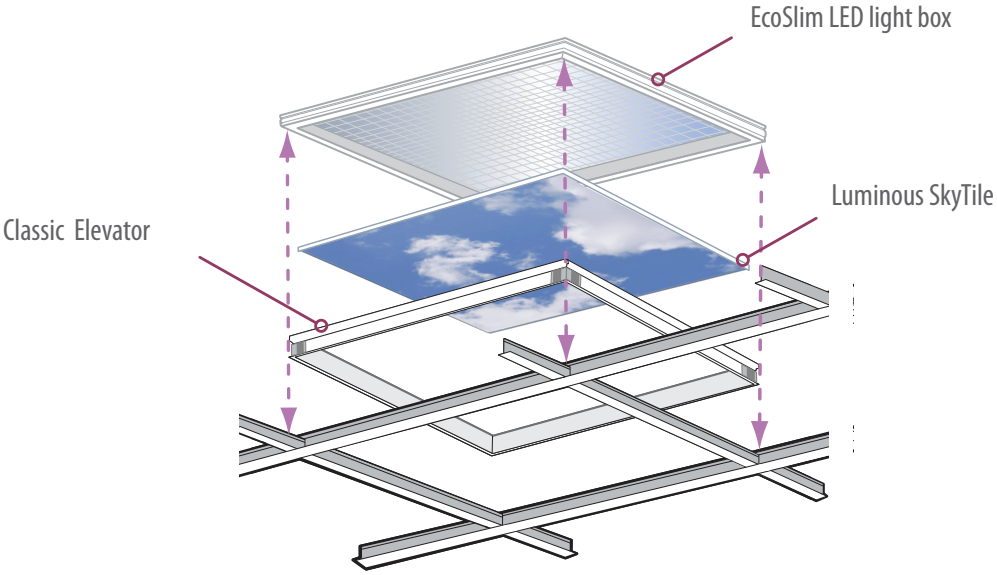

Installation Packet Includes:

Classic EcoSlim SkyCeiling QuickStart Guide

Classic w/ EcoSlim Installation Instructions

Drop Ceiling and Soffit Cross-Sections included on pages 10 - 13

Custom SkyCeiling Grid Plan GR1 (where applicable)

One of three electrical instructions:

- Classic w/ EcoSlim Electrical Packet (24PS HLG)

  Classic w/ EcoSlim Electrical Instructions (24PS HLG)

  EcoPlus and EcoSlim Drawings and Charts (24PS HLG)

- Classic w/ EcoSlim Electrical Instructions (HLG)

- Classic w/ EcoSlim Electrical Instructions (Fixture Only)

Luminous SkyTile Installation and SkyTile Layout (included with the SkyTiles)

For technical support at any time during the installation, please call us **toll free at 866-759-3228.**
We want your installation to go as smoothly as possible. Thank you for choosing Sky Factory.

Classic w/ EcoSlim Specifications:

Ceiling Grids

Each fixture is built specifically for one of these standard ceiling grid systems:

ES22 Series **ES22 -** 2' x 2', 15/16" **ES22M** - 60cm x 60cm, 24mm **ES22G -** 62.5cm x 62.5cm, 24mm
ES24 Series **ES24 -** 2' x 4', 15/16" **ES24M** - 60cm x 120cm, 24mm **ES24G** - 62.5cm x 125cm, 24mm
IMPORTANT: ES22 Series cannot be grouped with ES24 Series fixtures.
NOTE: For custom sizes, see **Custom Applications** below

Ceiling Openings

Access above ceiling is required. Not for use in air handling areas.
See Drop Ceiling and Soffit Cross Section drawings on pages 10 -13

Clearance

Must have at least 5 1/8" (130mm) of clearance from the bottom of the grid to the deck above. See Step 1
If not, call the Sky Factory for other options: 866-759-3228.

Runners and Spanners

Grid must be installed level and square
Grid Hanger Straps (provided) must be used to accomodate fixtures in grid pocket. See Step 2
For all 2' x 2', 60cm x 60cm, 62.5cm x 62.5cm ceiling grids, be sure all adjacent runners (mains) are not supported in the same opening or it may interfere with installation and removal of the fixture.

Fixture Suspension

Hanger brackets supplied to suspend fixtures from ceiling where required. See Step 3 and Step 5.

Custom Applications

For installations with custom sizes, and/or custom soffit or grid openings, see also
Custom SkyCeiling Grid Plan GR1 included (where applicable)

Electrical Requirements:

EcoSlim light box when used in conjunction with the Sky Factory 24PS HLG Power System

- See Classic w/ EcoSlim Electrical Packet (24PS HLG)

EcoSlim light box when used with a Sky Factory provided HLG power supply

- See Classic w/ EcoSlim Electrical Instructions (HLG)

EcoSlim light box when used with a client-provided, or client-specified UL Listed or CE Compliant power supply

- See Classic w/ EcoSlim Electrical Instructions (Fixture Only)

Electrical work must be performed by a qualified electrician who is familiar with DC lighting systems and must conform to all local and national codes.

Important! Before Starting

For standard 15/16" or 24mm ceiling grid without perimeter or edge angle:
use "Classic EcoSlim Luminous SkyCeiling Drop Ceiling Cross Section" drawings on pages 10-11 as a reference and proceed with the installation instructions.

For standard 15/16" or 24mm ceiling grid with perimeter or edge angle:
use "Classic EcoSlim Luminous SkyCeiling Soffit Cross Section" drawings on pages 12-13 as a reference and verify before beginning installation that the perimeter and/or soffit openings are the correct dimensions.

If your perimeter and/or soffit openings are not correct, please contact the Sky Factory before beginning the installation.

Step 1: Determine installation method

Fixture can be installed as pre-assembled unit or as one component at a time.

For Option A, the fixture can be assembled first and then inserted:

from an adjacent opening or by removing part of the grid (with a clearance of 6 3/4" [17cm] to 9" [23cm])

or directly through a grid opening (with 9" [23cm] or more clearance)

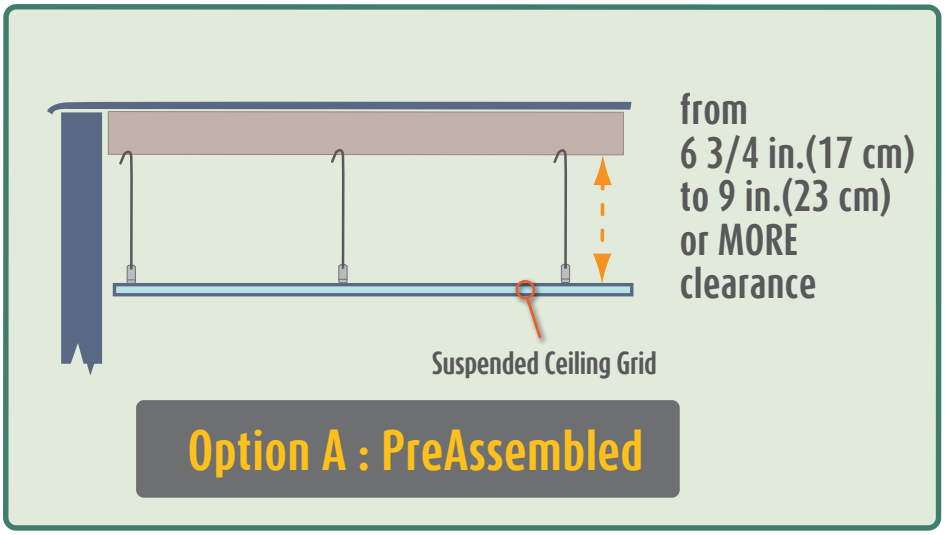

For Option B, the fixture can be installed one component at a time (with a clearance from 5 1/8" [13cm] & limited access above the grid)

NOTE: Option A and Option B details covered later in the Instructions.

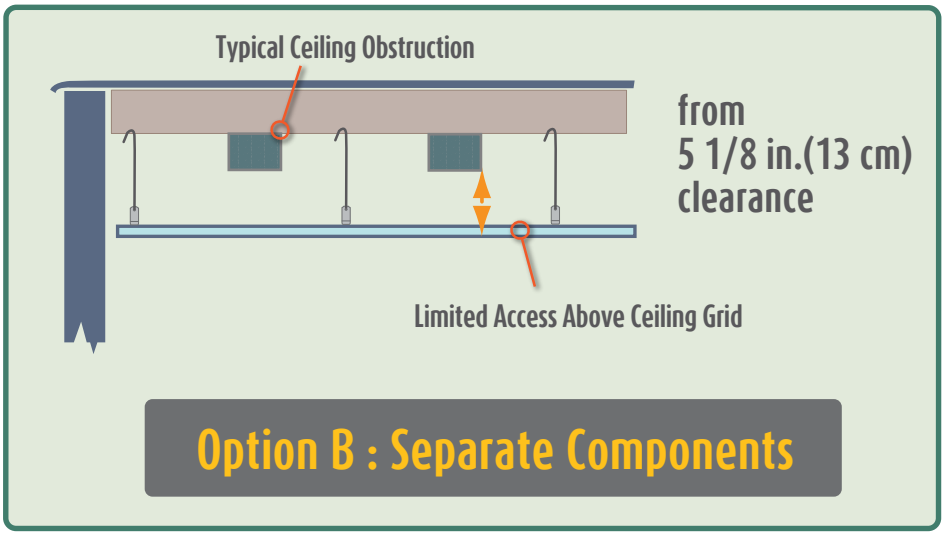

Step 2: Install grid hanger straps

Grid Hanger Straps allow the grid to be supported without the hanger wire interfering with the installation and proper fit of the EcoSlim fixture. Straps are designed to bend at the center, fold down over the top bulb of the runner and fasten through one of the holes in the grid. Use the enclosed 8-32 x 1/4" (6.35mm) undercut flat head machine screws and Keps nuts to secure it. Grid wire goes through the hole in the strap just below the fold.

Where possible, support the runners in the middle of openings for ease of fixture installation.

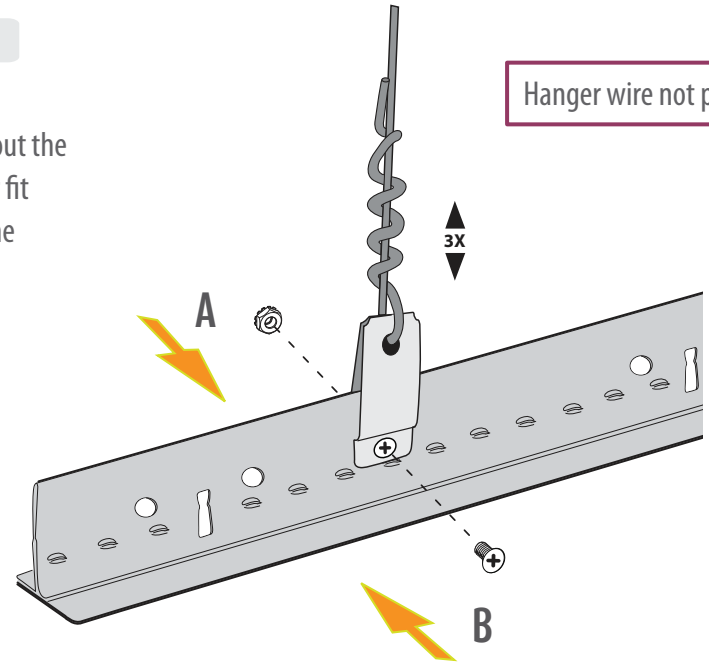

Note: Where possible, do not hang adjacent runners in the same 2' x 2', 60cm x 60cm, or 62.5cm x 62.5cm opening: installation of the fixtures may require one open side above the grid into which they can be temporarily inserted before dropping down into the grid pocket.

Step 3: Important details

Hanger brackets are provided which hold the fixture together and provide suspension where required.

NOTE: See page 7 for assembly details.

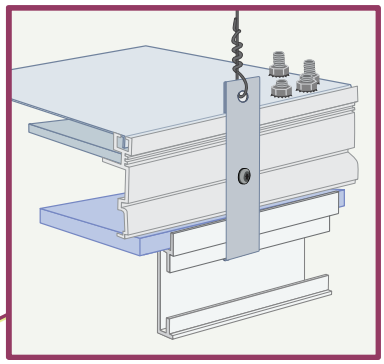

Classic w/ EcoSlim components:

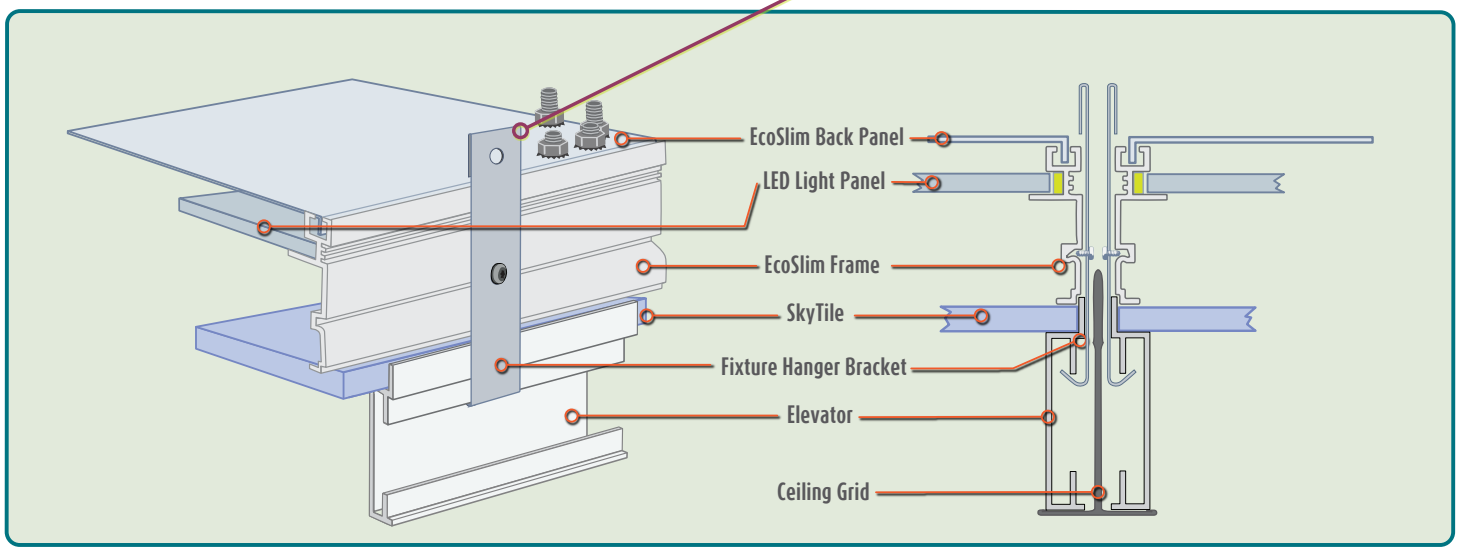

Step 2: Determine the electrical layout

Accommodations for wiring must be made before the fixtures are installed. Refer to the Electrical Installation Instructions included with your packet.

All electrical work must conform to local and national codes.

Notice: **The LED fixtures are 24DC ONLY.**

AC voltage connected directly to the fixtures will destroy the lighting system.

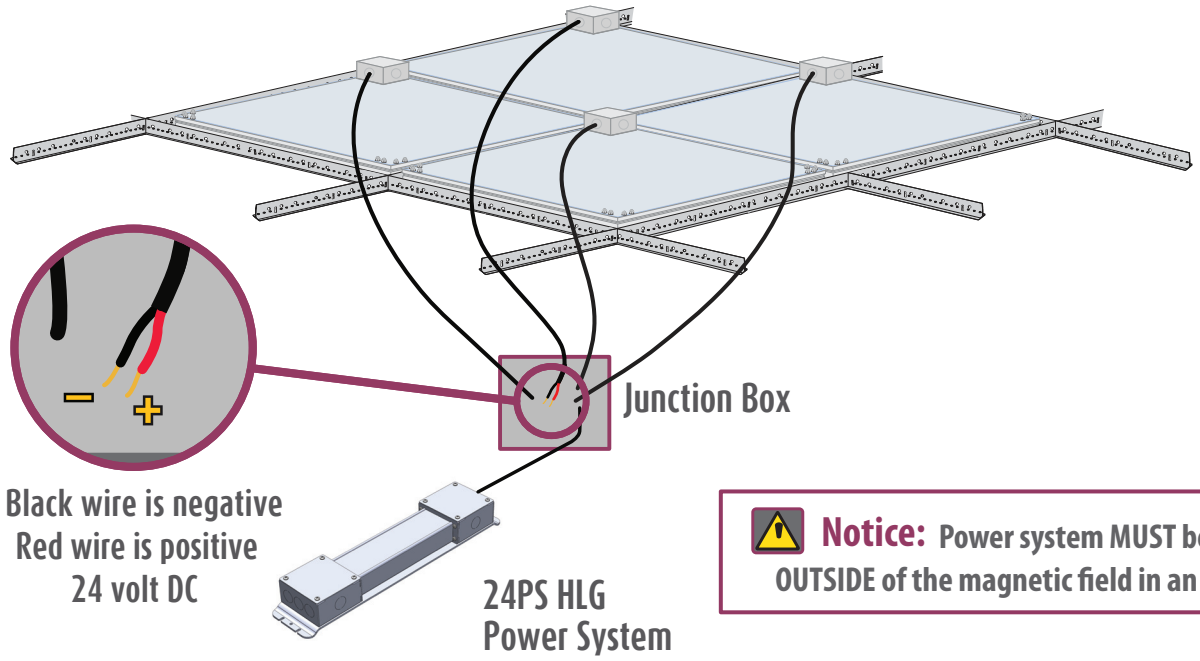

Notice: **Power system MUST be installed OUTSIDE of the magnetic field in an MRI suite.**

Note:

- If you are using a Sky Factory 24PS HLG Power System, make sure you have Classic w/ EcoSlim Electrical Packet (24PS HLG).
- If you are using a Sky Factory provided HLG power supply, make sure you have Classic w/ EcoSlim Electrical Instructions (HLG).
- If you are using a client provided, or client-specified UL Listed or CE Compliant power supply, make sure you have Classic w/ EcoSlim Electrical Instructions (Fixture Only).

Step 4: Fixture and SkyTile orientation

Fixtures MUST be installed so the SkyTiles fit the SkyTile Layout. See SkyTile Installation Instructions and SkyTile Layout included with the SkyTiles.

In all installations with more than one fixture, an elevator with logo is provided.

Elevator is installed in location noted on SkyTile Layout (included with SkyTiles).

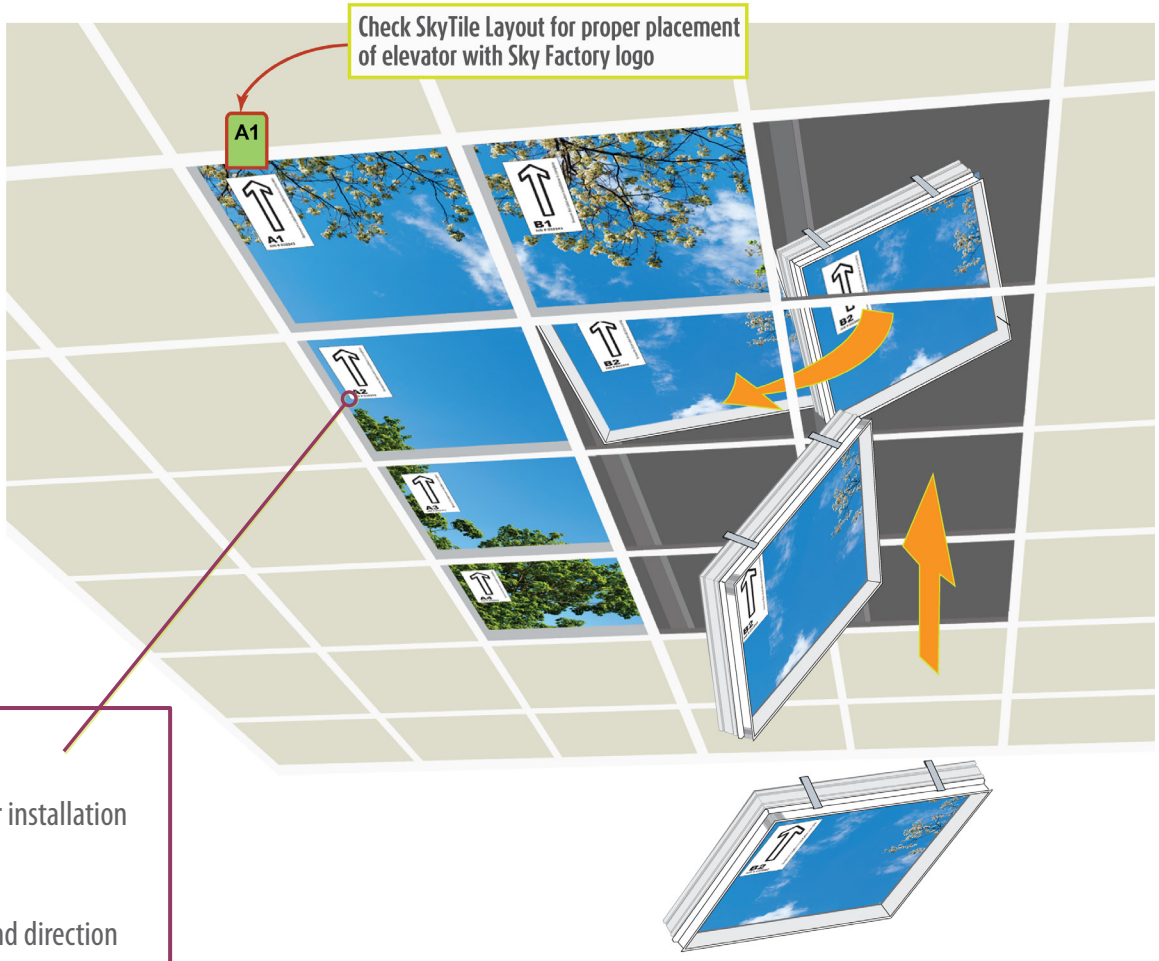

Important:

Quick release labels are for installation purposes only.

They orient the location and direction of each tile in the SkyCeiling.

Labels MUST be removed once the SkyTiles are fully installed and checked for proper orientation.

Step 5: Option A - Install pre-assembled fixtures

Where a pre-assembled fixture can be inserted into the space above the grid either from an adjacent opening, by removing part of the grid, or if there is 9" (23cm) or more of clearance between the bottom of the grid and deck above.

Pre-assemble the three components of the fixture: the Elevator, SkyTile and EcoSlim light box. See also detail on page 4

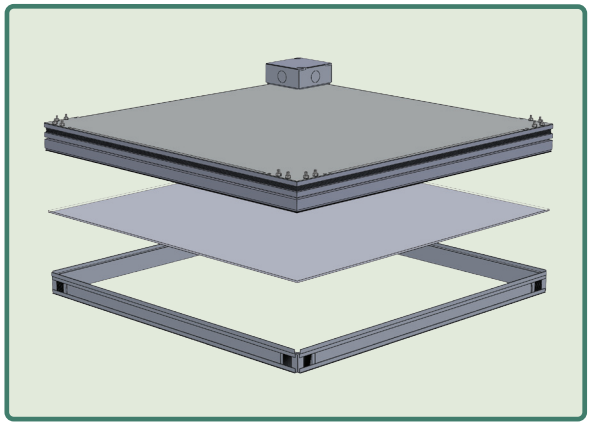

Use the hanger brackets to secure the Elevator to the light box.

Brackets mount on opposite sides, 2 per side for ES22 Series, 3 per long side for ES24 Series.

Set brackets 4" (10cm) in from corners and center the third one for ES24 Series.

Brackets screw to light box using 6-32 x 1/4" thread forming screws provided.

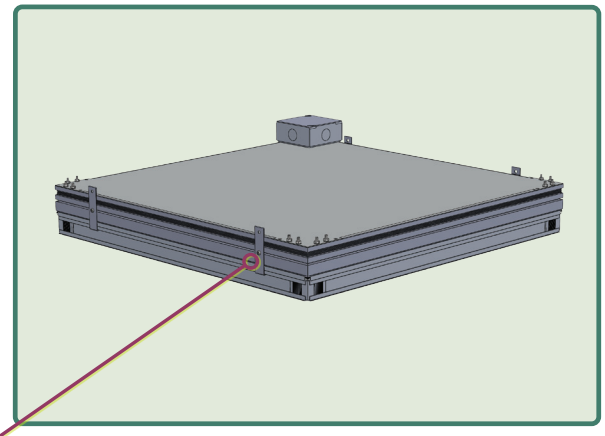

Hanger wire option shown.

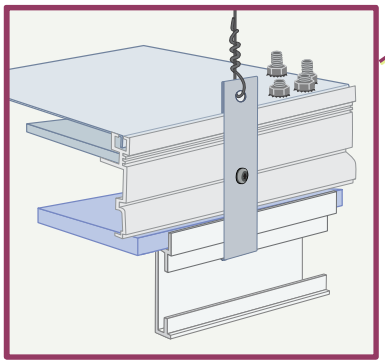

Insert the assembled fixture into the grid much as you would a ceiling tile.

Step 6: Option B - Assemble components during installation

If a pre-assembled fixture cannot be inserted above the grid.

Insert the Elevator into the grid opening first.

Next, drop the SkyTile into the Elevator.

Then set the EcoSlim light box
on top the Elevator/SkyTile sandwich..

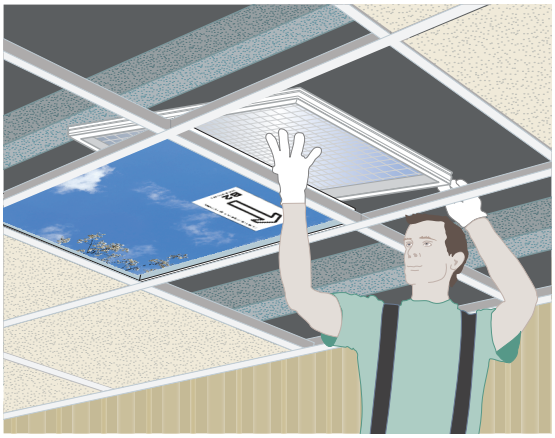

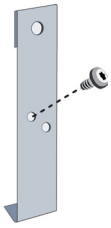

Be sure to secure the components together with the hanger brackets once installed.

Step 7: Check installation using Final Inspection list.

Do all the fixtures sit evenly in the grid?

- Hanger wire can force a fixture to sit off center. If so, re-attach the wire using a Grid Hanger Strap.
- If grid is not installed square, EcoSlim fixtures will sit unevenly in the opening. If so, adjust grid so it is square.

Are all the fixtures seated down on the grid flange?

- If fixtures are not seated on the flange, light leaks could result.

Is the image evenly lit?

- If there are shadows, dark spots, or bright lines on the image, clear off the back of the SkyTile.
- If one or more SkyTiles are dark, one or more EcoSlim light boxes are not working. Re-check wiring.

Does the SkyCeiling image match the SkyTile Layout image?

- Are the tiles in the correct position and orientation?
- If the SkyTile Layout has a head location, is the SkyCeiling properly oriented?

Is the elevator with logo in correct location?

- See SkyTile Layout for correct location.
- NOTE: Single 2x2 and 2x4 installations do not have logo.

Have the arrow-labels been removed once the image has been verified?

- Quick release labels MUST be removed once the SkyTiles are fully installed and checked for proper orientation.

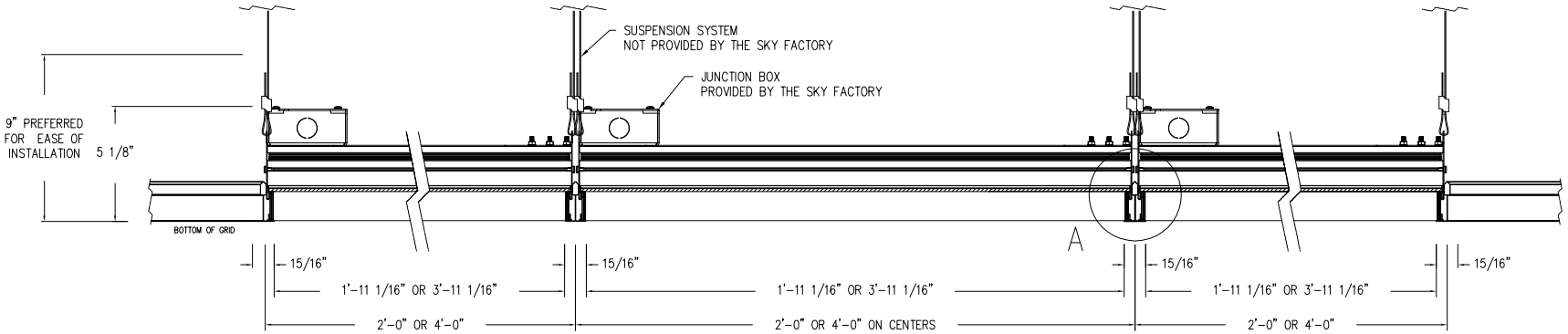

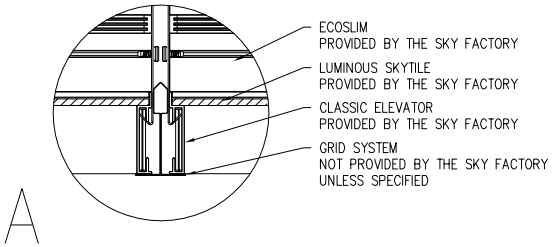

Sky Factory™
PO BOX 1177
Fairfield, Iowa 52556
Phone: 641-472-1747
www.TheSkyFactory.com

PRODUCT

CLASSIC ECOSLIM LUMINOUS SKYCEILING
TYPICAL GRID CEILING
CROSS SECTION - IMPERIAL

DRAWN BY RA | DATE CREATED 05-23-16

REVISIONS

DATE	COMMENTS
07-25-16	RA
06-15-17	RA

XS1

SHEET 1 OF 1

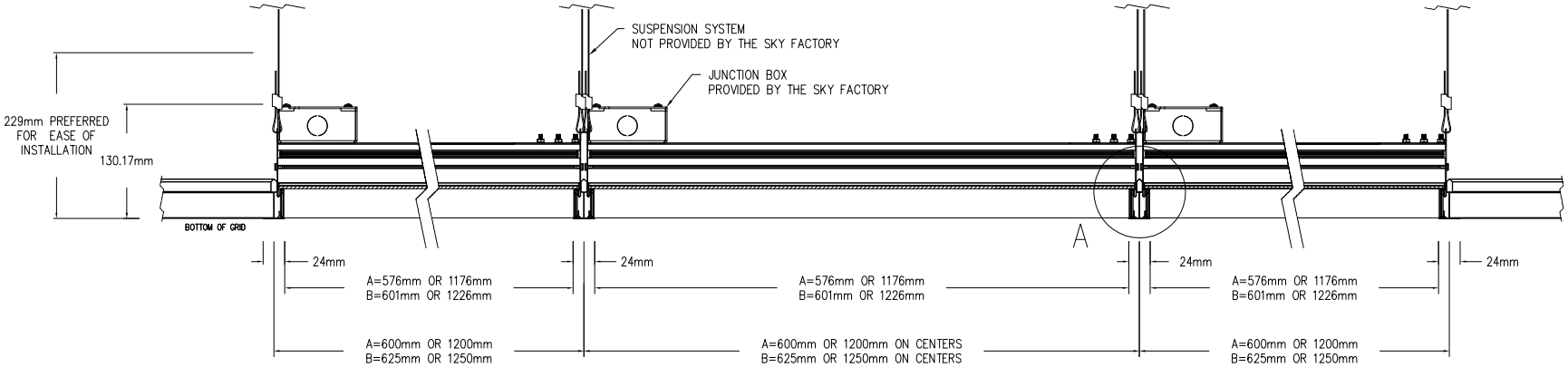

NOTE:
A (METRIC) = 600mm & 1200mm GRID SYSTEM
B (METRIC) = 625mm & 1250mm GRID SYSTEM

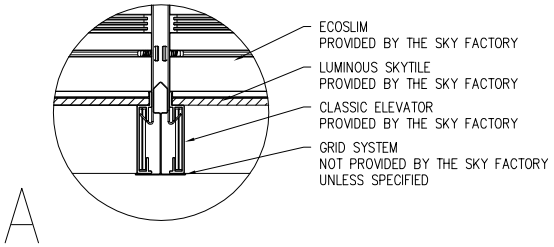

Sky Factory™
PO BOX 1177
Fairfield, Iowa 52556
Phone: 641-472-1747
www.TheSkyFactory.com

PRODUCT

CLASSIC ECOSLIM LUMINOUS SKYCEILING
TYPICAL GRID CEILING
CROSS SECTION - METRIC

DRAWN BY RA | DATE CREATED 05-23-16

REVISIONS

DATE	COMMENTS
07-25-16	RA
06-15-17	RA

XS1

SHEET 1 OF 1

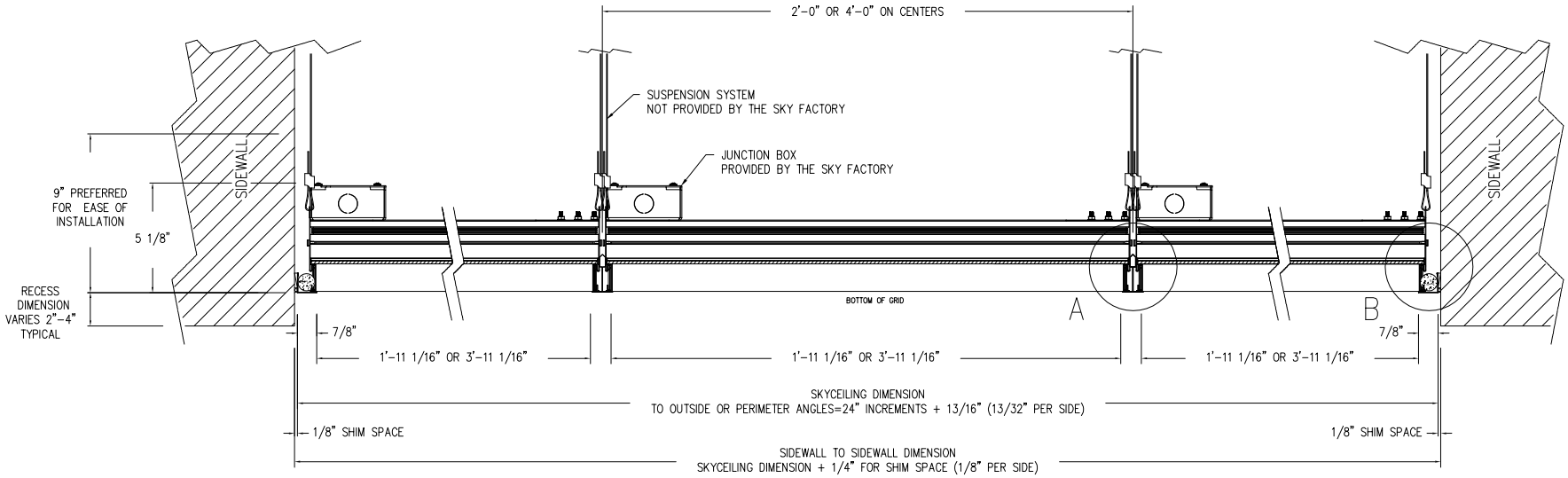

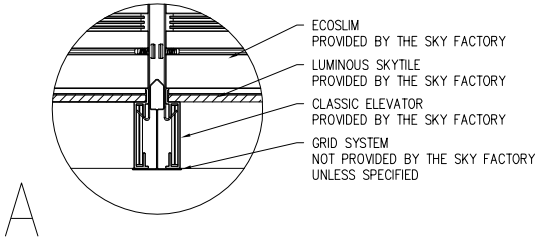

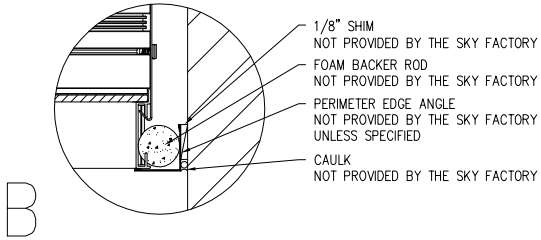

Sky Factory™
PO BOX 1177
Fairfield, Iowa 52556
Phone: 641-472-1747
www.TheSkyFactory.com

PRODUCT

CLASSIC ECOSLIM LUMINOUS SKYCEILING
HARD CEILING
CROSS SECTION - IMPERIAL

DRAWN BY	RA	DATE CREATED	05-23-16

REVISIONS

DATE	COMMENTS
07-25-16	RA
06-15-17	RA

XS1

SHEET 1 OF 1

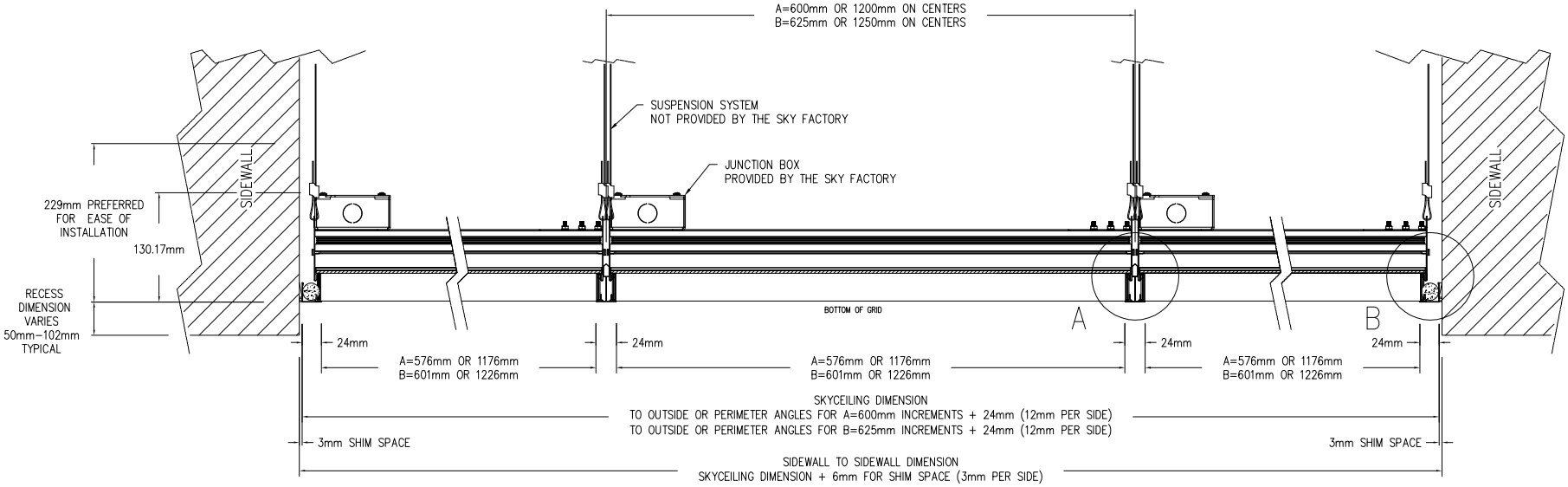

NOTE:
A (METRIC) = 600mm & 1200mm GRID SYSTEM
B (METRIC) = 625mm & 1250mm GRID SYSTEM

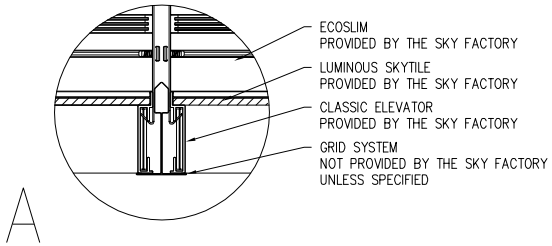

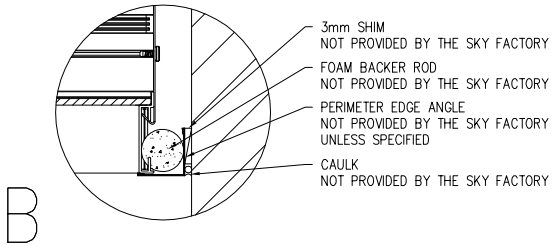

Sky Factory™
PO BOX 1177
Fairfield, Iowa 52556
Phone: 641-472-1747
www.TheSkyFactory.com

PRODUCT

CLASSIC ECOSLIM LUMINOUS SKYCEILING HARD CEILING CROSS SECTION - METRIC

DRAWN BY	RA	DATE CREATED	05-23-16

REVISIONS

DATE	COMMENTS
07-25-16	RA
06-15-17	RA

XS1

SHEET 1 OF 1